NOTE:

- 150 LBS. ANSI BOLT PATTERN STANDARD ON ALL FLANGED NOZZLES.
- NOZZLES AVAILABLE IN 2", 4", 6", 8", 10", 12" AND 14" DIAMETERS.

BOTTOM FULL DRAIN NOZZLE

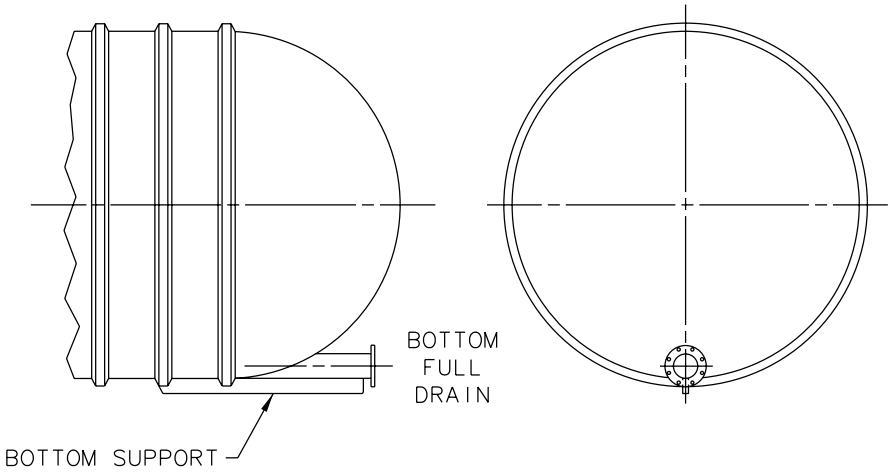

TOP AND BOTTOM NOZZLES

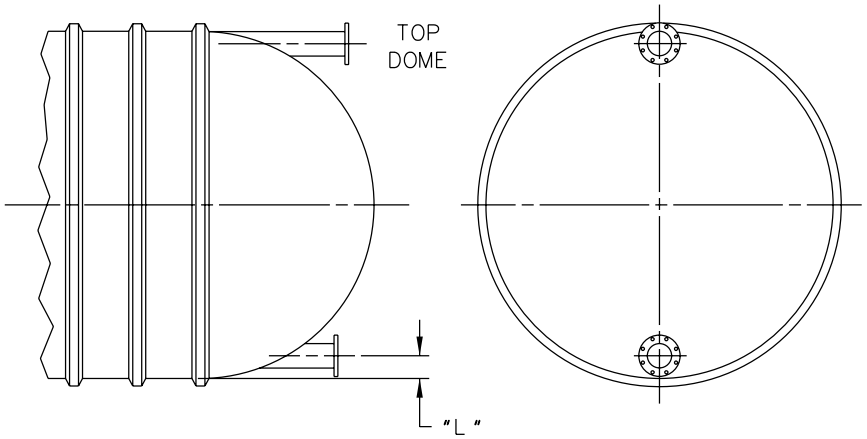

SIDE WALL NOZZLES

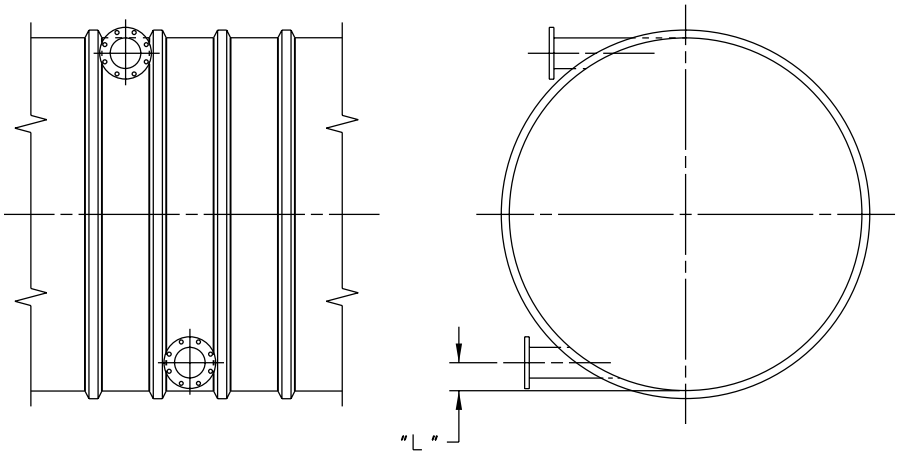

NOZZLE PLACEMENT	
NOZZLE DIA.	NOZZLE HEIGHT "L"
2"	3"
4"	5"
6"	6"
8"	7"
10"	8"
12"	10"
14"	12"

XERXES® CORPORATION

TITLE: FIBERGLASS NOZZLES

DATE 3-05 | DR. NO. S11-371.00