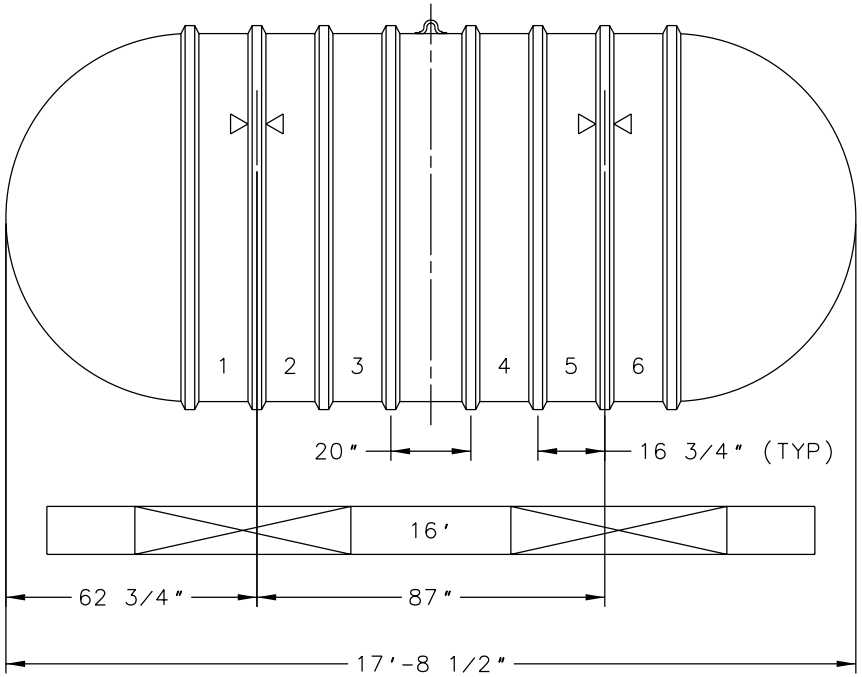

Optional prefabricated engineered concrete deadmen shown

XERXES® CORPORATION

TITLE
8' DIA. SINGLE-WALL
CAP. 5,000 GALLONS

DATE 8-08

DR. NO. S10-872.02