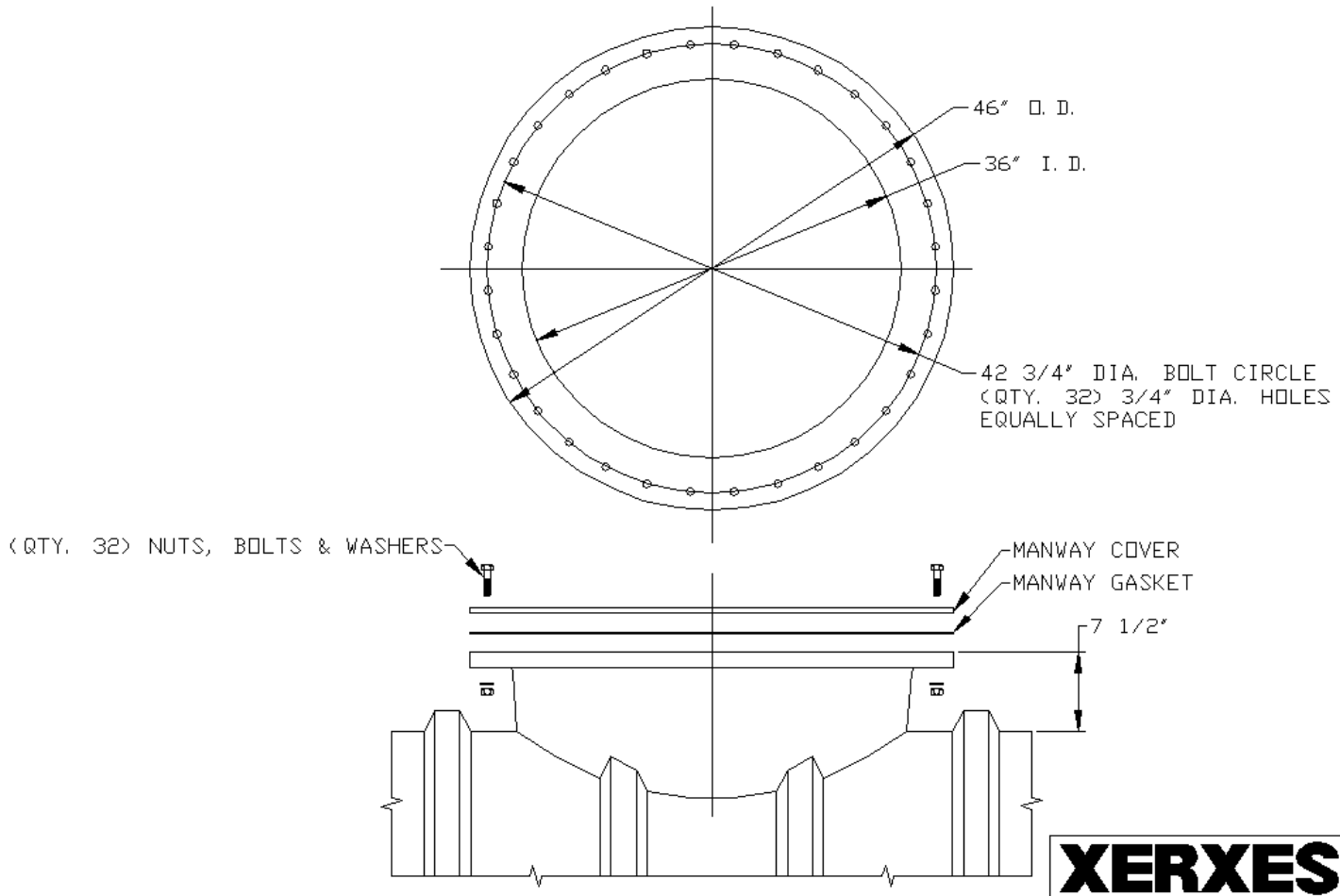

XERXES®
CORPORATION

TITLE	36' MANWAY DETAIL
DATE 11-99	DR. NO. S10-815