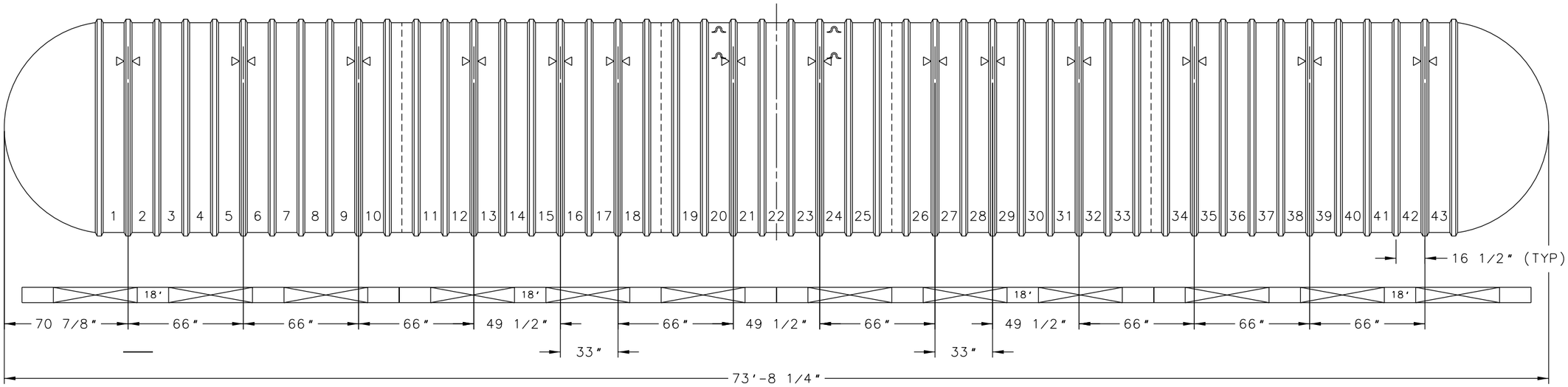


Optional prefabricated engineered concrete deadmen shown

XERXES®
CORPORATION

TITLE
10' DIA. SINGLE-WALL
CAP. 40,000 GALLONS

DATE 8-08 | DR. NO. S10-894.04